# 2STL1525

## Low voltage high performance NPN power transistor

## Features

- Very low collector-emitter saturation voltage
- High current gain characteristic
- Fast switching speed

## Applications

- Emergency lighting
- LED drive
- Motherboard and hard disk drive
- Mobile equipment
- DC-DC converter, voltage regulation

## Description

The device is a NPN transistor manufactured using new “PB-HCD” (power bipolar high current density) technology. The resulting transistor shows exceptional high gain performances coupled with very low saturation voltage.

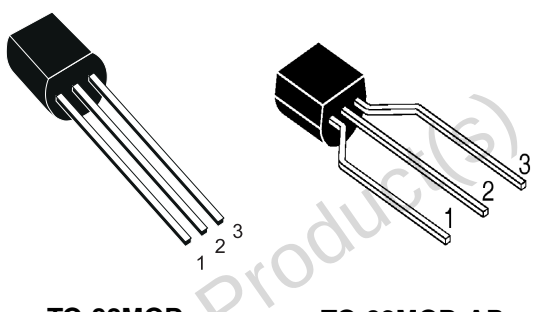


**Figure 1. Internal schematic diagram**

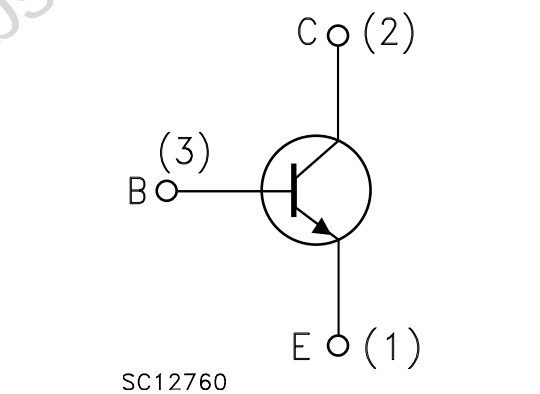


Obsolete Product(s) - Obsolete Product(s)

**Table 1. Device summary**

| Order codes | Marking | Package | Packaging |
|---|---|---|---|
| 2STL1525 | 2STL1525 | TO-92MOD | Bag |
| 2STL1525-AP | 2STL1525 | TO-92MOD-AP | Ammopack |

# 1 Electrical ratings

**Table 2. Absolute maximum ratings**

| Symbol | Parameter | Value | Unit |
|---|---|---|---|
| $V_{CEX}$ | Collector-emitter voltage ($V_{BE}$ = -1.5 V) | 95 | V |
| $V_{CEO}$ | Collector-emitter voltage ($I_B$ = 0) | 25 | V |
| $V_{EBO}$ | Emitter-base voltage ($I_C$ = 0) | 5 | V |
| $I_C$ | Collector current | 5 | A |
| $I_{CM}$ | Collector peak current ($t_P$ < 5 ms) | 10 | A |
| $I_B$ | Base current | 1 | A |
| $P_{TOT}$ | Total dissipation at $T_{amb}$ = 25 °C | 1.5 | W |
| $T_{STG}$ | Storage temperature | -65 to 150 | °C |
| $T_J$ | Max. operating junction temperature | 150 | °C |

**Table 3. Thermal data**

| Symbol | Parameter | Value | Unit |
|---|---|---|---|
| $R_{thJA}$ | Thermal resistance junction-ambient max | 83 | °C/W |

Obsolete Product(s) - Obsolete Product(s)

# 2 Electrical characteristics

$T_{case}$ = 25 °C unless otherwise specified.

**Table 4. Electrical characteristics**

| Symbol | Parameter | Test conditions | Min. | Typ. | Max. | Unit |
|---|---|---|---|---|---|---|
| $I_{CBO}$ | Collector cut-off current ($I_E$ = 0) | $V_{CB}$ = 50 V | | | 0.1 | µA |
| $I_{EBO}$ | Emitter cut-off current ($I_C$ = 0) | $V_{EB}$ = 4 V | | | 0.1 | µA |
| $V_{(BR)CEX}$ | Collector-emitter breakdown voltage ($V_{BE}$ = -1.5 V) | $I_C$ = 1 mA | 95 | | | V |
| $V_{(BR)CEO}$ (1) | Collector-emitter breakdown voltage ($I_B$ = 0) | $I_C$ = 10 mA | 25 | | | V |
| $V_{(BR)EBO}$ | Emitter-base breakdown voltage ($I_C$ = 0) | $I_E$ = 100 µA | 5 | | | V |
| $h_{FE}$ (1) | DC current gain | $I_C$ = 0.5 A $V_{CE}$ = 2 V<br>$I_C$ = 3 A $V_{CE}$ = 2 V<br>$I_C$ = 5 A $V_{CE}$ = 5 V | 150<br>100 | <br><br>150 | 500 | |
| $V_{CE(sat)}$ (1) | Collector-emitter saturation voltage | $I_C$ = 3 A $I_B$ = 300 mA<br>$I_C$ = 3.5 A $I_B$ = 40 mA | | 220 | <br>500 | mV<br>mV |
| $V_{BE(sat)}$ (1) | Base-emitter saturation voltage | $I_C$ = 3 A $I_B$ = 300 mA | | | 1.2 | V |
| $C_{CBO}$ | Collector-base capacitance ($I_E$ = 0) | $V_{CB}$ = 10 V, f = 1 MHz | | 20 | | pF |
| $f_T$ | Transition frequency | $V_{CE}$ = 10 V $I_C$ = 50 mA | | 120 | | MHz |
| <br>$t_{on}$<br>$t_{off}$ | Resistive load<br>Turn-on time<br>Turn-off time | <br>$I_C$ = 1.5 A $V_{CC}$ = 10 V<br>$I_{B1}$ = -$I_{B2}$ = 150 mA | | <br>60<br>450 | | <br>ns<br>ns |

1. Pulse test: pulse duration ≤ 300 µs, duty cycle ≤ 2%

Obsolete Product(s) - Obsolete Product(s)

# 3 Package mechanical data

In order to meet environmental requirements, ST offers these devices in different grades of ECOPACK® packages, depending on their level of environmental compliance. ECOPACK® specifications, grade definitions and product status are available at: *www.st.com*. ECOPACK® is an ST trademark.

**Table 5. TO-92MOD mechanical data**

| Dim. | mm. | | |
|---|---|---|---|
| | Min. | Typ. | Max. |
| A | 4.7 | | 5.1 |
| A1 | 1.730 | | 2.030 |
| b | 0.4 | | 0.6 |
| b1 | 0.9 | | 1.1 |
| c | 0.4 | | 0.5 |
| D | 5.8 | | 6.2 |
| D1 | 4.0 | | |
| E | 8.4 | | 8.8 |
| e | | 1.5 | |
| e1 | 2.9 | | 3.1 |
| L | 13.8 | | 14.2 |
| K | | | 1.6 |
| h | 0.0 | | 0.380 |

Obsolete Product(s) - Obsolete Product(s)

**Figure 2. TO-92MOD drawing mechanical data**

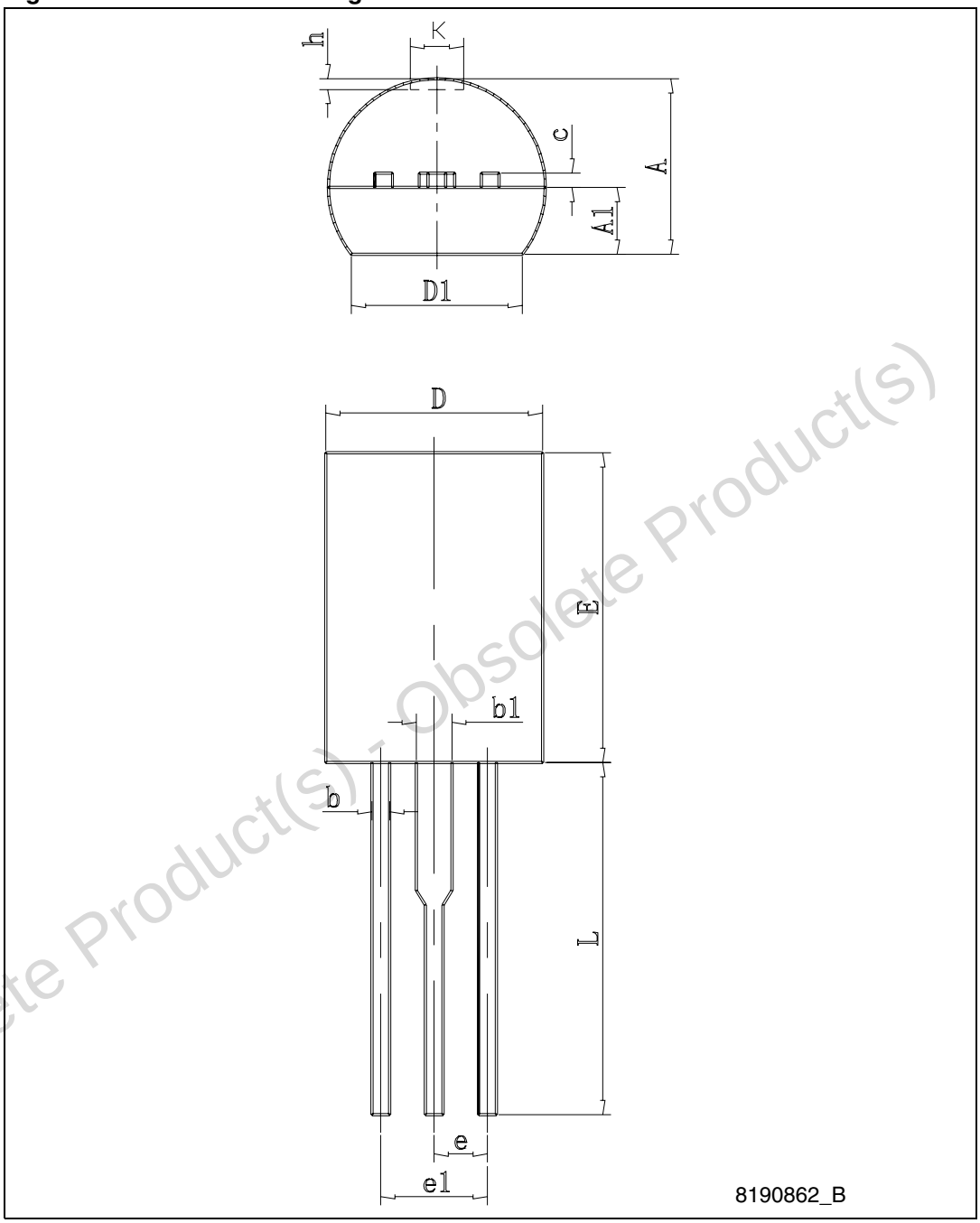


Obsolete Product(s) - Obsolete Product(s)

### TO-92MOD-AP ammopack dimension

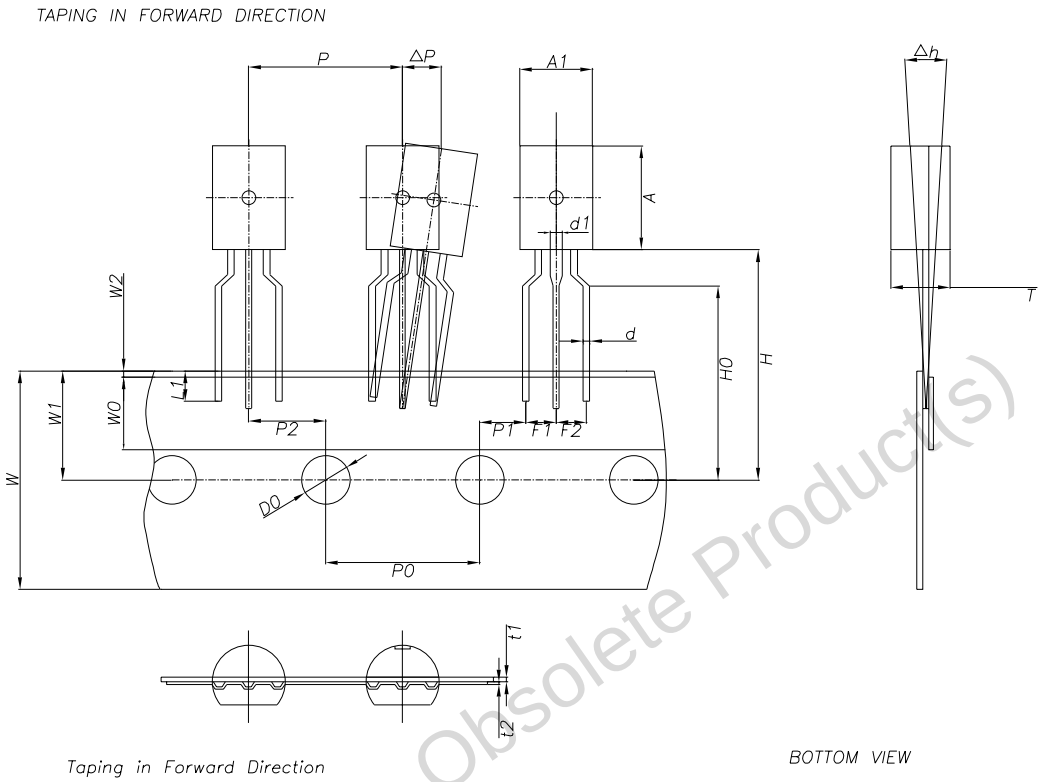


| ITEM | SYMBOL | VALUE & TOLERANCE |
|---|---|---|
| Body Width | A1 | 6.0 ± 0.2 |
| Body Eigth | A | 8.6 ± 0.2 |
| Body Thickness | T | 4.9 ± 0.2 |
| Lead Wire Diameter | d | 0.5 ± 0.05 |
| Lead Wire Diameter 1 | d1 | 1.0 ± 0.05 |
| Pitch of component | P | 12.7 ± 0.3 |
| Feed Hole Pitch | P0 | 12.7 ± 0.2 |
| Hole center to component center | P2 | 6.35 ± 0.3 |
| Lead to lead distance | F1, F2 | 2.5 ± 0.3 |
| Component alignment F-R | Δh | 0 ± 1.0 |
| Type width | W | 18.0 +1.0, −0.5 |
| Hole down tape width | W0 | 6.0 ± 0.5 |
| Hole position | W1 | 9.0 ± 0.5 |
| Hole down tape position | W2 | 1.0 MAX |
| Height of component from tape center | H | 19.0 ± 1.0 |
| Lead wire clinch height | H0 | 16.0 ± 0.5 |
| Lead wire (tape portion) | L1 | 2.5 MIN |
| Feed hole diameter | D0 | 4.0 ± 0.2 |
| Taped Lead Thickness | t1 | 0.4 ± 0.05 |
| Carrier tape Thickness | t2 | 0.2 ± 0.05 |
| Position of Hole | P1 | 3.85 ± 0.03 |
| Component alignment | ΔP | 0 ± 1.0 |
| | | Unit: mm |

*Dimensions in mm

*Cumulative pitch error: 1.0mm/20 pitches

*Groung paper tape: 0.5mm+/−0.1

8231868_B

Obsolete Product(s) - Obsolete Product(s)

# 4 Revision history

**Table 6. Document revision history**

| Date | Revision | Changes |
|---|---|---|
| 31-Jul-2009 | 1 | Initial release. |
| 01-Dec-2010 | 2 | Document status promoted from preliminary data to datasheet. Updated package mechanical data *Table 5 on page 4* and *Figure 2 on page 5*. |

Obsolete Product(s) - Obsolete Product(s)

**Please Read Carefully:**

Information in this document is provided solely in connection with ST products. STMicroelectronics NV and its subsidiaries (“ST”) reserve the right to make changes, corrections, modifications or improvements, to this document, and the products and services described herein at any time, without notice.

All ST products are sold pursuant to ST’s terms and conditions of sale.

Purchasers are solely responsible for the choice, selection and use of the ST products and services described herein, and ST assumes no liability whatsoever relating to the choice, selection or use of the ST products and services described herein.

No license, express or implied, by estoppel or otherwise, to any intellectual property rights is granted under this document. If any part of this document refers to any third party products or services it shall not be deemed a license grant by ST for the use of such third party products or services, or any intellectual property contained therein or considered as a warranty covering the use in any manner whatsoever of such third party products or services or any intellectual property contained therein.

**UNLESS OTHERWISE SET FORTH IN ST’S TERMS AND CONDITIONS OF SALE ST DISCLAIMS ANY EXPRESS OR IMPLIED WARRANTY WITH RESPECT TO THE USE AND/OR SALE OF ST PRODUCTS INCLUDING WITHOUT LIMITATION IMPLIED WARRANTIES OF MERCHANTABILITY, FITNESS FOR A PARTICULAR PURPOSE (AND THEIR EQUIVALENTS UNDER THE LAWS OF ANY JURISDICTION), OR INFRINGEMENT OF ANY PATENT, COPYRIGHT OR OTHER INTELLECTUAL PROPERTY RIGHT.**

**UNLESS EXPRESSLY APPROVED IN WRITING BY AN AUTHORIZED ST REPRESENTATIVE, ST PRODUCTS ARE NOT RECOMMENDED, AUTHORIZED OR WARRANTED FOR USE IN MILITARY, AIR CRAFT, SPACE, LIFE SAVING, OR LIFE SUSTAINING APPLICATIONS, NOR IN PRODUCTS OR SYSTEMS WHERE FAILURE OR MALFUNCTION MAY RESULT IN PERSONAL INJURY, DEATH, OR SEVERE PROPERTY OR ENVIRONMENTAL DAMAGE. ST PRODUCTS WHICH ARE NOT SPECIFIED AS "AUTOMOTIVE GRADE" MAY ONLY BE USED IN AUTOMOTIVE APPLICATIONS AT USER’S OWN RISK.**

Resale of ST products with provisions different from the statements and/or technical features set forth in this document shall immediately void any warranty granted by ST for the ST product or service described herein and shall not create or extend in any manner whatsoever, any liability of ST.

ST and the ST logo are trademarks or registered trademarks of ST in various countries.

Information in this document supersedes and replaces all information previously supplied.

The ST logo is a registered trademark of STMicroelectronics. All other names are the property of their respective owners.

© 2010 STMicroelectronics - All rights reserved

STMicroelectronics group of companies

Australia - Belgium - Brazil - Canada - China - Czech Republic - Finland - France - Germany - Hong Kong - India - Israel - Italy - Japan - Malaysia - Malta - Morocco - Philippines - Singapore - Spain - Sweden - Switzerland - United Kingdom - United States of America

**www.st.com**

Obsolete Product(s) - Obsolete Product(s)